DELIVERY SPECIFICATION

SPEC. No. C-General-o

D A T E : Jan., 2024

To

Non-Controlled Copy

CUSTOMER'S PRODUCT NAME	TDK'S PRODUCT NAME Multilayer Ceramic Chip Capacitors Bulk and tape packaging【RoHS2 compliant】 C0603,C1005,C1608,C2012,C3216,C3225, C4532,C5750 Type C0G,X5R,X6S,X7R,X7S,X7T Characteristics

Please return this specification to TDK representatives with your signature.
If orders are placed without returned specification, please allow us to judge that specification is accepted by your side.

RECEIPT CONFIRMATION

DATE: YEAR MONTH DAY

TDK Corporation
Sales
Electronic Components
Sales & Marketing Group

Engineering
Electronic Components Business Company
Ceramic Capacitors Business Group

APPROVED	Person in charge

APPROVED	CHECKED	Person in charge

SCOPE

This delivery specification shall be applied to Multilayer ceramic chip capacitors to be delivered to _____.

PRODUCTION PLACES

Production places defined in this specification shall be TDK Corporation, TDK(Suzhou)Co.,Ltd and TDK Components U.S.A.,Inc.

PRODUCT NAME

The name of the product to be defined in this specifications shall be C◇◇◇◇○○○△△□□□×.

REFERENCE STANDARD

JIS	C 5101－1：2010	Fixed capacitors for use in electronic equipment-Part 1: Generic specification
	C 5101－21：2014	Fixed capacitors for use in electronic equipment-Part 21 : Sectional specification : Fixed surface mount multilayer capacitors of ceramic dielectric,Class1
	C 5101－22：2014	Fixed capacitors for use in electronic equipment-Part 22 : Sectional specification : Fixed surface mount multilayer capacitors of ceramic dielectric,Class2
	C 0806－3：2014	Packaging of components for automatic handling - Part 3: Packaging of surface mount components on continuous tapes
JEITA	RCR－2335 C 2014	Safety application guide for fixed ceramic capacitors for use in electronic equipment

CONTENTS

1. CODE CONSTRUCTION
2. COMBINATION OF RATED CAPACITANCE AND TOLERANCE
3. OPERATING TEMPERATURE RANGE
4. STORING CONDITION AND TERM
5. P.C. BOARD
6. INDUSTRIAL WASTE DISPOSAL
7. PERFORMANCE
8. INSIDE STRUCTURE AND MATERIAL
9. PACKAGING
10. RECOMMENDATION
11. SOLDERING CONDITION
12. CAUTION
13. TAPE PACKAGING SPECIFICATION

<EXPLANATORY NOTE>

When the mistrust in the spec arises, this specification is given priority. And it will be confirmed by written spec change after conference of both posts involved.
This specification warrants the quality of the ceramic chip capacitor. Capacitors should be evaluated or confirmed a state of mounted on your product.
If the use of the capacitors goes beyond the bounds of this specification, we can not afford to guarantee.

Division	Date	SPEC. No.
Ceramic Capacitors Business Group	January, 2024	C-General-o

1. CODE CONSTRUCTION

(Example)

C2012	X7R	1E	225	K	T	OOOO
(1)	(2)	(3)	(4)	(5)	(6)	(7)

(1) Case size

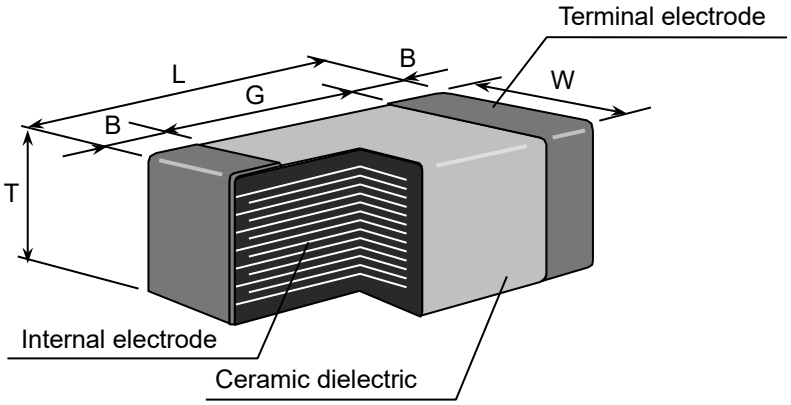

Case size [EIA style]	Dimensions (mm)				
	L	W	T	B	G
C0603 (CC0201)	0.60±0.03	0.30±0.03	0.30±0.03	0.10 min.	0.20 min.
	0.60±0.05	0.30±0.05	0.30±0.05		
C1005 [CC0402]	1.00±0.05	0.50±0.05	0.50±0.05	0.10 min.	0.30 min.
	1.00±0.10	0.50±0.10	0.50±0.10		
	$1.00^{+0.15}_{-0.10}$	$0.50^{+0.15}_{-0.10}$	$0.50^{+0.15}_{-0.10}$		
C1608 [CC0603]	1.60±0.10	0.80±0.10	0.80±0.10	0.20 min.	0.30 min.
	$1.60^{+0.15}_{-0.10}$	$0.80^{+0.15}_{-0.10}$	$0.80^{+0.15}_{-0.10}$		
	1.60±0.20	0.80±0.20	0.80±0.20		
C2012 [CC0805]	2.00±0.20	1.25±0.20	0.60±0.15	0.20 min.	0.50 min.
			0.85±0.15		
			1.25±0.20		
	$2.00^{+0.25}_{-0.15}$	$1.25^{+0.25}_{-0.15}$	$1.25^{+0.25}_{-0.15}$		
C3216 [CC1206]	3.20±0.20	1.60±0.20	0.60±0.15	0.20 min.	1.00 min.
			0.85±0.15		
			1.15±0.15		
			1.30±0.20		
			1.60±0.20		
	$3.20^{+0.30}_{-0.10}$	$1.60^{+0.30}_{-0.10}$	$1.60^{+0.30}_{-0.10}$		
C3225 [CC1210]	3.20±0.40	2.50±0.30	1.25±0.20	0.20 min.	——
			1.60±0.20		
			2.00±0.20		
			2.30±0.20		
			2.50±0.30		
	$3.20^{+0.45}_{-0.40}$	$2.50^{+0.35}_{-0.30}$	$2.50^{+0.35}_{-0.30}$		
	3.20±0.40	$2.50^{+0.40}_{-0.30}$	$2.50^{+0.40}_{-0.30}$		
C4532 [CC1812]	4.50±0.40	3.20±0.40	1.60±0.20	0.20 min.	——
			2.00±0.20		
			2.30±0.20		
			2.50±0.30		
			2.80±0.30		
			3.20±0.30		

* As for each item, please refer to detail page on TDK web.

Case size [EIA style]	Dimensions (mm)				
	L	W	T	B	G
C5750 [CC2220]	5.70±0.40	5.00±0.40	1.60±0.20	0.20 min.	——
			2.00±0.20		
			2.30±0.20		
			2.50±0.30		
			2.80±0.30		

* As for each item, please refer to detail page on TDK web.

(2) Temperature Characteristics
* Details are shown in table 1 No.6 and No.7 at 7.PERFORMANCE

(3) Rated Voltage

Symbol	Rated Voltage
2 J	DC 630 V
2 W	DC 450 V
2 V	DC 350 V
2 E	DC 250 V
2 A	DC 100 V
1 N	DC 75 V
1 H	DC 50 V

Symbol	Rated Voltage
1 V	DC 35 V
1 E	DC 25 V
1 C	DC 16 V
1 A	DC 10 V
0 J	DC 6.3 V
0 G	DC 4 V

(4) Rated Capacitance

Stated in three digits and in units of pico farads (pF).
The first and Second digits identify the first and second significant figures of the capacitance, the third digit identifies the multiplier.
R is designated for a decimal point.

(Example)

Symbol	Rated Capacitance
2R2	2.2 pF
225	2,200,000 pF

(5) Capacitance tolerance
* M tolerance shall be standard for over 10uF.

Symbol	Tolerance	Capacitance
C	± 0.25 pF	10pF and under
D	± 0.5 pF	
G	± 2 %	Over 10pF
J	± 5 %	
K	± 10 %	
* M	± 20 %	

(6) Packaging
* C0603,C1005 type is applicable to tape packaging only.

Symbol	Packaging
B	Bulk
T	Taping

(7) TDK internal code

2. COMBINATION OF RATED CAPACITANCE AND TOLERANCE

Class	Temperature Characteristics	Capacitance tolerance		Rated capacitance
1	C0G	10pF and under	C (± 0.25pF)	1, 2, 3, 4, 5
			D (± 0.5pF)	6, 7, 8, 9, 10
		Over 10pF	G (± 2 %) J (± 5 %)	E – 6 series
2	X5R X6S X7R X7S X7T	10uF and under	K (± 10 %) M (± 20 %)	E – 6 series
		Over 10uF	M (± 20 %)	

Capacitance Step in E series

E series	Capacitance Step					
E- 6	1.0	1.5	2.2	3.3	4.7	6.8

3. OPERATING TEMPERATURE RANGE

T.C.	Min. operating Temperature	Max. operating Temperature	Reference Temperature
X5R	-55°C	85°C	25°C
X6S	-55°C	105°C	25°C
C0G/X7R/X7S/X7T	-55°C	125°C	25°C

4. STORING CONDITION AND TERM

Storing temperature	Storing humidity	Storing term
5~40°C	20~70%RH	Within 6 months upon receipt.

5. P.C. BOARD

When mounting on an aluminum substrate, the capacitors are more likely to be affected by heat stress from the substrate.
Please inquire separate specification when mounted on the substrate.

6. INDUSTRIAL WASTE DISPOSAL

Dispose this product as industrial waste in accordance with the Industrial Waste Law.

7. PERFORMANCE

table 1

<table>
<tr><th>No.</th><th colspan="2">Item</th><th>Performance</th><th>Test or inspection method</th></tr>
<tr><td>1</td><td colspan="2">External Appearance</td><td>No defects which may affect performance.</td><td>Inspect with magnifying glass (3×), in case of C0603 type, with magnifying glass (10×)</td></tr>
<tr><td>2</td><td colspan="2">Insulation Resistance</td><td>Please refer to detail page on TDK web.</td><td>Measuring voltage : Rated voltage
(As for the capacitor of rated voltage 630V DC, apply 500V DC.)
Voltage application time : 60s.</td></tr>
<tr><td>3</td><td colspan="2">Voltage Proof</td><td>Withstand test voltage without insulation breakdown or other damage.</td><td>
<table>
<tr><th>Class</th><th>Rated voltage(RV)</th><th>Apply voltage</th></tr>
<tr><td rowspan="2">1</td><td>RV≦100V</td><td>3 × rated voltage</td></tr>
<tr><td>100V＜RV</td><td>1.5 × rated voltage</td></tr>
<tr><td rowspan="5">2</td><td>RV≦100V</td><td>2.5 × rated voltage</td></tr>
<tr><td>C2012X7R2A225K
C3216X7R2A475K
C3225X7R2A106K</td><td>2 × rated voltage</td></tr>
<tr><td>100V＜RV≦500V</td><td>1.5 × rated voltage</td></tr>
<tr><td>500V＜RV</td><td>1.3 × rated voltage</td></tr>
<tr><td>C2012X5R2A475K
C3216X6S2A106K</td><td>1.25 × rated voltage</td></tr>
</table>
Voltage application time : 1s.
Charge / discharge current : 50mA or lower
</td></tr>
<tr><td>4</td><td colspan="2">Capacitance</td><td>Within the specified tolerance.</td><td>As for measuring condition, please contact with our sales representative.</td></tr>
<tr><td rowspan="2">5</td><td>Q</td><td>Class1</td><td rowspan="2">Please refer to detail page on TDK web.</td><td rowspan="2">See No.4 in this table for measuring condition.</td></tr>
<tr><td>Dissipation Factor</td><td>Class2</td></tr>
</table>

(continued)

No.	Item		Performance	Test or inspection method
6	Temperature Characteristics of Capacitance (Class1)		T.C. / Temperature Coefficient (ppm/°C): C0G / 0 ± 30 Capacitance drift: Within ± 0.2% or ± 0.05pF, whichever larger.	Temperature coefficient shall be calculated based on values at 25°C and 85°C temperature. Measuring temperature below 25°C shall be -10°C and -25°C.
7	Temperature Characteristics of Capacitance (Class2)		Capacitance Change (%) No voltage applied X5R : ±15 X6S : ±22 X7R : ±15 X7S : ±22 X7T : +22 - 33	Capacitance shall be measured by the steps shown in the following table after thermal equilibrium is obtained for each step. ΔC be calculated ref. STEP3 reading Step / Temperature(°C): 1 / Reference temp. ± 2; 2 / Min. operating temp. ± 2; 3 / Reference temp. ± 2; 4 / Max. operating temp. ± 2 As for Min./Max. operating temp and Reference temp., please refer to "3. OPERATING TEMPERATURE RANGE" As for measuring voltage, please contact with our sales representative.
8	Robustness of Terminations		No sign of termination coming off, breakage of ceramic, or other abnormal signs.	Reflow solder the capacitors on a P.C.Board shown in Appendix 2. Apply a pushing force gradually at the center of a specimen in a horizontal direction of P.C.board. Pushing force : 5N (2N is applied for C0603,C1005 type.) Holding time : 10±1s 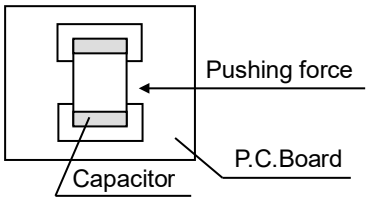
9	Bending	External appearance	No mechanical damage.	Reflow solder the capacitors on a P.C.Board shown in Appendix1 and bend it for 1mm. 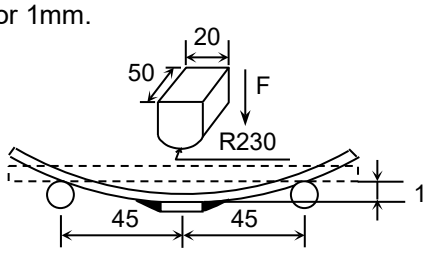 (Unit : mm)

(continued)

<table>
<tr><th>No.</th><th colspan="2">Item</th><th>Performance</th><th>Test or inspection method</th></tr>
<tr><td>10</td><td colspan="2">Solderability</td><td>New solder to cover over 75% of termination.
25% may have pin holes or rough spots but not concentrated in one spot.
Ceramic surface of A sections shall not be exposed due to melting or shifting of termination material.
 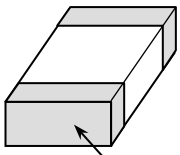
A section</td><td>Solder : Sn-3.0Ag-0.5Cu

Flux : Isopropyl alcohol (JIS K 8839) Rosin (JIS K 5902) 25% solid solution.

Solder temp. : 245±5°C

Dwell time : 3±0.3s.

Solder position : Until both terminations are completely soaked.</td></tr>
<tr><td rowspan="6">11</td><td rowspan="6">Resistance to solder heat</td><td>External appearance</td><td>No cracks are allowed and terminations shall be covered at least 60% with new solder.</td><td rowspan="6">Solder : Sn-3.0Ag-0.5Cu

Flux : Isopropyl alcohol (JIS K 8839) Rosin (JIS K 5902) 25% solid solution.

Solder temp. : 260±5°C

Dwell time : 10±1s.

Solder position : Until both terminations are completely soaked.

Pre-heating : Temp. — 110~140°C
Time — 30～60s.

Leave the capacitors in ambient condition for
Class 1 : 6~24h
Class 2 : 24±2h before measurement.</td></tr>
<tr><td>Capacitance</td><td><table><tr><th colspan="2">Characteristics</th><th>Change from the value before test</th></tr><tr><td>Class 1</td><td>C0G</td><td>Capacitance drift within ±2.5% or ±0.25pF, whichever larger.</td></tr><tr><td>Class 2</td><td>X5R
X6S
X7R
X7S
X7T</td><td>± 7.5 %</td></tr></table></td></tr>
<tr><td>Q (Class1)</td><td>Meet the initial spec.</td></tr>
<tr><td>D.F. (Class2)</td><td>Meet the initial spec.</td></tr>
<tr><td>Insulation Resistance</td><td>Meet the initial spec.</td></tr>
<tr><td>Voltage proof</td><td>No insulation breakdown or other damage.</td></tr>
</table>

(continued)

<table>
<tr><th>No.</th><th colspan="2">Item</th><th>Performance</th><th>Test or inspection method</th></tr>
<tr><td rowspan="4">12</td><td rowspan="4">Vibration</td><td>External appearance</td><td>No mechanical damage.</td><td rowspan="4">Frequency : 10~55~10Hz
Reciprocating sweep time : 1 min.
Amplitude : 1.5mm
Repeat this for 2h each in 3 perpendicular directions(Total 6h).

Reflow solder the capacitors on a P.C.Board shown in Appendix 2 before testing.</td></tr>
<tr><td>Capacitance</td><td>
<table>
<tr><th colspan="2">Characteristics</th><th>Change from the value before test</th></tr>
<tr><td>Class1</td><td>C0G</td><td>Capacitance drift within ±2.5% or ±0.25pF, whichever larger.</td></tr>
<tr><td>Class2</td><td>X5R
X6S
X7R
X7S
X7T</td><td>± 7.5 %</td></tr>
</table>
</td></tr>
<tr><td>Q
(Class1)</td><td>Meet the initial spec.</td></tr>
<tr><td>D.F.
(Class2)</td><td>Meet the initial spec.</td></tr>
<tr><td rowspan="6">13</td><td rowspan="6">Temperature cycle</td><td>External appearance</td><td>No mechanical damage.</td><td rowspan="6">Expose the capacitors in the condition step1 through step 4 listed in the following table.

Temp. cycle : 5 cycles
<table>
<tr><th>Step</th><th>Temperature(°C)</th><th>Time (min.)</th></tr>
<tr><td>1</td><td>Min. operating temp.±3</td><td>30 ± 3</td></tr>
<tr><td>2</td><td>Ambient Temp.</td><td>2 ~ 5</td></tr>
<tr><td>3</td><td>Max. operating temp.±2</td><td>30 ± 2</td></tr>
<tr><td>4</td><td>Ambient Temp.</td><td>2 ~ 5</td></tr>
</table>
As for Min./Max. operating temp., please refer to “3. OPERATING TEMPERATURE RANGE”

Leave the capacitors in ambient condition for
Class 1 : 6~24h
Class 2 : 24±2h before measurement.

Reflow solder the capacitors on a P.C.Board shown in Appendix2 before testing.</td></tr>
<tr><td>Capacitance</td><td>
<table>
<tr><th colspan="2">Characteristics</th><th>Change from the value before test</th></tr>
<tr><td>Class1</td><td>C0G</td><td rowspan="2">Please contact with our sales re presentative.</td></tr>
<tr><td>Class2</td><td>X5R
X6S
X7R
X7S
X7T</td></tr>
</table>
</td></tr>
<tr><td>Q
(Class1)</td><td>Meet the initial spec.</td></tr>
<tr><td>D.F.
(Class2)</td><td>Meet the initial spec.</td></tr>
<tr><td>Insulation Resistance</td><td>Meet the initial spec.</td></tr>
<tr><td>Voltage proof</td><td>No insulation breakdown or other damage.</td></tr>
</table>

(continued)

<table>
<tr><th>No.</th><th colspan="2">Item</th><th>Performance</th><th>Test or inspection method</th></tr>
<tr><td rowspan="5">14</td><td rowspan="5">Moisture Resistance (Steady State)</td><td>External appearance</td><td>No mechanical damage.</td><td rowspan="5">Test temp. : 40±2°C
Test humidity : 90~95%RH
Test time : 500 +24,0h
Leave the capacitors in ambient condition for
Class 1 : 6~24h
Class 2 : 24±2h before measurement.

Reflow solder the capacitors on a P.C.Board shown in Appendix2 before testing.</td></tr>
<tr><td>Capacitance</td><td>
<table>
<tr><th colspan="2">Characteristics</th><th>Change from the value before test</th></tr>
<tr><td>Class1</td><td>C0G</td><td rowspan="2">Please contact with our sales representative.</td></tr>
<tr><td>Class2</td><td>X5R
X6S
X7R
X7S
X7T</td></tr>
</table>
</td></tr>
<tr><td>Q
(Class1)</td><td>
<table>
<tr><th>Capacitance</th><th>Q</th></tr>
<tr><td>30pF and over</td><td>350 min.</td></tr>
<tr><td>10pF and over under 30pF</td><td>275+5/2×C min.</td></tr>
<tr><td>Under 10pF</td><td>200+10×C min.</td></tr>
</table>
C : Rated capacitance (pF)
</td></tr>
<tr><td>D.F.
(Class2)</td><td>200% of initial spec. max.</td></tr>
<tr><td>Insulation Resistance</td><td>Please contact with our sales representative.</td></tr>
</table>

(continued)

<table>
<tr><th>No.</th><th colspan="2">Item</th><th>Performance</th><th>Test or inspection method</th></tr>
<tr><td rowspan="5">15</td><td rowspan="5">Moisture Resistance</td><td>External appearance</td><td>No mechanical damage.</td><td rowspan="5">Test temp. : 40±2°C
Test humidity : 90~95%RH
Applied voltage : Rated voltage
Test time : 500 +24,0h
Charge/discharge current : 50mA or lower
Leave the capacitors in ambient condition for
Class 1 : 6~24h
Class 2 : 24±2h before measurement.

Reflow solder the capacitors on a P.C.Board shown in Appendix2 before testing.

Initial value setting (only for class 2)
Voltage conditioning 《After voltage treat the capacitors under testing temperature and voltage for 1 hour,》 leave the capacitors in ambient condition for 24±2h before measurement.
Use this measurement for initial value.</td></tr>
<tr><td>Capacitance</td><td><table><tr><th colspan="2">Characteristics</th><th>Change from the value before test</th></tr><tr><td>Class1</td><td>C0G</td><td rowspan="2">Please contact with our sales representative.</td></tr><tr><td>Class2</td><td>X5R
X6S
X7R
X7S
X7T</td></tr></table></td></tr>
<tr><td>Q
(Class1)</td><td><table><tr><th>Capacitance</th><th>Q</th></tr><tr><td>30pF and over</td><td>200 min.</td></tr><tr><td>Under 30pF</td><td>100+10/3×C min.</td></tr></table>C : Rated capacitance (pF)</td></tr>
<tr><td>D.F.
(Class2)</td><td>200% of initial spec. max.</td></tr>
<tr><td>Insulation Resistance</td><td>Please contact with our sales representative.</td></tr>
</table>

(continued)

<table>
<tr><th>No.</th><th colspan="2">Item</th><th>Performance</th><th>Test or inspection method</th></tr>
<tr><td rowspan="4">16</td><td rowspan="4">Life</td><td>External appearance</td><td>No mechanical damage.</td><td rowspan="4">Test temp. : Maximum operating temperature±2°C
Applied voltage : Please contact with our sales representative.

Test time : 1,000 +48,0h
Charge/discharge current : 50mA or lower
Leave the capacitors in ambient condition for
Class 1 : 6~24h
Class 2 : 24±2h before measurement.

Reflow solder the capacitors on a P.C.Board shown in Appendix2 before testing.

Initial value setting (only for class 2)
Voltage conditioning 《After voltage treat the capacitors under testing temperature and voltage for 1 hour,》 leave the capacitors in ambient condition for 24±2h before measurement.
Use this measurement for initial value.</td></tr>
<tr><td>Capacitance</td><td>
<table>
<tr><th colspan="2">Characteristics</th><th>Change from the value before test</th></tr>
<tr><td>Class1</td><td>C0G</td><td rowspan="2">Please contact with our sales representative.</td></tr>
<tr><td>Class2</td><td>X5R
X6S
X7R
X7S
X7T</td></tr>
</table>
</td></tr>
<tr><td>Q
(Class1)</td><td>
<table>
<tr><th>Capacitance</th><th>Q</th></tr>
<tr><td>30pF and over</td><td>350 min.</td></tr>
<tr><td>10pF and over under 30pF</td><td>275+5/2×C min.</td></tr>
<tr><td>Under 10pF</td><td>200+10×C min.</td></tr>
</table>
C : Rated capacitance (pF)
</td></tr>
<tr><td>D.F.
(Class2)</td><td>200% of initial spec. max.</td></tr>
<tr><td></td><td></td><td>Insulation Resistance</td><td>Please contact with our sales representative.</td></tr>
</table>

*As for the initial measurement of capacitors (Class2) on number 7,11,12,13 and 14, leave capacitors at 150 0,-10°C for 1 hour and measure the value after leaving capacitors for 24 ± 2h in ambient condition.

Appendix1

P.C.Board for bending test

(C0603,C1005)

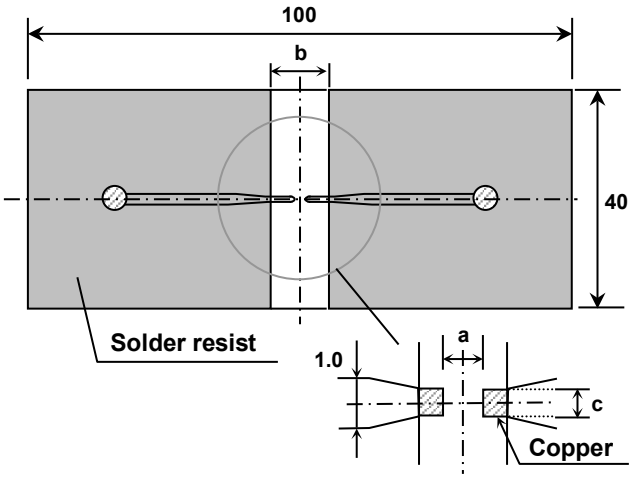

(C1608,C2012,C3216,C3225,C4532,C5750)

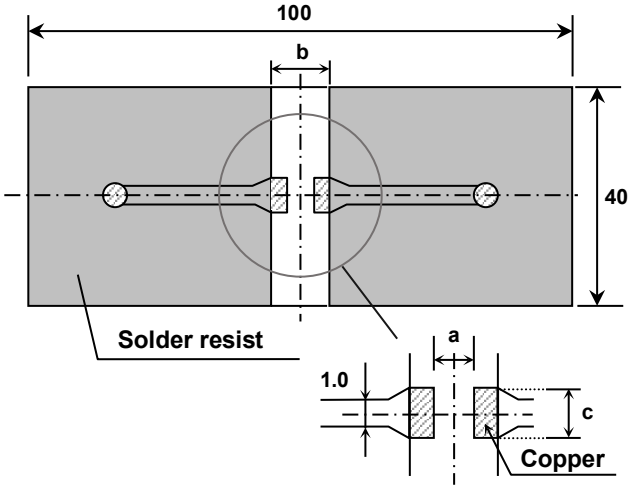

Appendix2

P.C. Board for reliability test

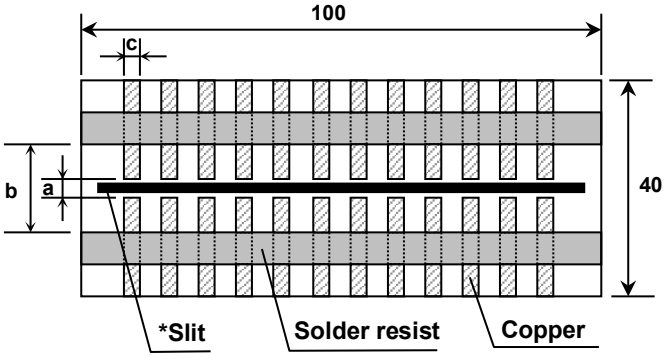

* It is recommended to provide a slit on P.C.Board for C3225,C4532 and C5750.

(Unit : mm)

Symbol / Case size	a	b	c
C0603 [CC0201]	0.3	0.8	0.3
C1005 [CC0402]	0.4	1.5	0.5
C1608 [CC0603]	1.0	3.0	1.2
C2012 [CC0805]	1.2	4.0	1.65
C3216 [CC1206]	2.2	5.0	2.0
C3225 [CC1210]	2.2	5.0	2.9
C4532 [CC1812]	3.5	7.0	3.7
C5750 [CC2220]	4.5	8.0	5.6

1. Material : Glass Epoxy(As per JIS C6484 GE4)

2. Thickness : Appendix 1 — 0.8mm (C0603,C1005)
— 1.6mm (C1608,C2012,C3216,C3225,C4532,C5750)
: Appendix 2 — 1.6mm

Copper(Thickness:0.035mm)
Solder resist

8. INSIDE STRUCTURE AND MATERIAL

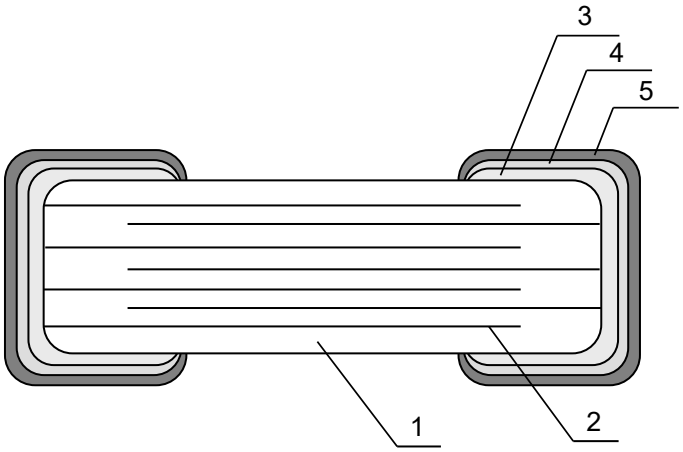

No.	NAME	MATERIAL	
		Class1	Class2
1	Dielectric	$CaZrO_3$	$BaTiO_3$
2	Electrode	Nickel (Ni)	
3	Termination	Copper (Cu)	
4		Nickel (Ni)	
5		Tin (Sn)	

9. PACKAGING

Packaging shall be done to protect the components from the damage during transportation and storing, and a label which has the following information shall be attached.

9.1 Each plastic bag for bulk packaging contains 1000pcs. And the minimum quantity for Bulk packaging is 1000pcs.

9.2 Tape packaging is as per 13. TAPE PACKAGING SPECIFICATION.
* C0603[CC0201],C1005[CC0402] type is applicable to tape packaging only.

1) Inspection No.*
2) TDK P/N
3) Customer's P/N
4) Quantity

*Composition of Inspection No.

Example	F	3	A	–	23	–	001
	(a)	(b)	(c)		(d)		(e)

(a) Line code
(b) Last digit of the year
(c) Month and A for January and B for February and so on. (Skip I)
(d) Inspection Date of the month.
(e) Serial No. of the day

*Composition of new Inspection No.
(Implemented on and after May 1, 2019 in sequence)

Example	I	F	3	E	2	3	A	0	0	1
	(a)	(b)	(c)	(d)	(e)		(f)		(g)	

(a) Prefix
(b) Line code
(c) Last digit of the year
(d) Month and A for January and B for February and so on. (Skip I)
(e) Inspection Date of the month.
(f) Serial No. of the day(00 ~ ZZ)
(g) Suffix(00 ~ ZZ)

* It was shifted to the new inspection No. on and after May 2019, but the implementation timing may be different depending on shipment bases. Until the shift is completed, either current or new composition of inspection No. will be applied.

10. RECOMMENDATION

As for C3225[CC1210] and larger, It is recommended to provide a slit (about 1mm width) in the board under the components to improve washing Flux. And please make sure to dry detergent up completely before.

11. SOLDERING CONDITION

As for C0603 [CC0201], C1005[CC0402], C3225[CC1210] and larger, reflow soldering only.
For other case sizes than the above, reflow soldering is recommended.

12. CAUTION

No.	Process	Condition
1	Operating Condition (Storage, Use, Transportation)	1-1. Storage, Use The capacitors must be stored in an ambient temperature of 5 to 40°C with a relative humidity of 20 to 70%RH. JIS C 60721-3-1 Class 1K2 should be followed for the other climatic conditions. 1) High temperature and humidity environment may affect a capacitor's solder ability because it accelerates terminal oxidization. They also deteriorate performance of taping and packaging. Therefore, SMD capacitors shall be used within 6 months. For capacitors with terminal electrodes consisting of silver or silver-palladium which tend to become oxidized or sulfurized, use as soon as possible, such as within one month after opening the bag. 2) When capacitors are stored for a longer time period than 6 months, confirm the solderability of the capacitors prior to use. During storage, keep the minimum packaging unit in its original packaging without opening it. Do not deviate from the above temperature and humidity conditions even for a short term. 3) Corrosive gasses in the air or atmosphere may result in deterioration of the reliability, such as poor solderability of the terminal electrodes. Do not store capacitors where they will be exposed to corrosive gas (e.g., hydrogen sulfide, sulfur dioxide, chlorine ammonia etc.) 4) Solderability and electrical performance may deteriorate due to photochemical change in the terminal electrode if stored in direct sunlight, or due to condensation from rapid changes in humidity. The capacitors especially which use resin material must be operated and stored in an environment free of dew condensation, as moisture absorption due to condensation may affect the performance. 5) Refer to JIS C 60721-3-1, class 1K2 for other climate conditions. 1-2. Handling in transportation In case of the transportation of the capacitors, the performance of the capacitors may be deteriorated depending on the transportation condition. (Refer to JEITA RCR-2335C 9.2 Handling in transportation)
2	Circuit design ⚠ Caution	2-1. Operating temperature 1) Upper category temperature (maximum operating temperature) is specified. It is necessary to select a capacitor whose rated temperature us higher than the operating temperature. Also, it is necessary to consider the temperature distribution in the equipment and seasonal temperature variation. 2) Surface temperature including self heating should be below maximum operating temperature. Due to dielectric loss, capacitors will heat itself when AC is applied due to ESR. Especially at high frequencies, please be careful that the heat might be so extreme. Also, even if the surface temperature of the capacitor includes self-heating and is the maximum operating temperature or lower, excessive heating of the capacitor due to self-heating may cause deterioration of the characteristics and reliability of the capacitor. The self-heating temperature rise of the capacitor changes depending on the difference in heat radiation due to the mounting method to the device, the ambient temperature, the cooling method of the device and circuit board material and the design, etc. The load should be contained so that the self-heating temperature rise of the capacitor body in a natural convection environment at an ambient temperature of 25°C remain below 20°C. When using in a high-frequency circuit or a circuit in which a capacitor generates heat, such as when a high-frequency ripple current flows, pay attention to the above precautions. (Note that accurate measurement may not be possible with self-heating measurement when the equipment applies cooling other than natural convection such as a cooling fan.) 3) The electrical characteristics of the capacitors will vary depending on the temperature. The capacitors should be selected and designed in taking the temperature into consideration.

No.	Process	Condition
2	Circuit design ⚠ Caution	2-2. When overvoltage is applied Applying overvoltage to a capacitor may cause dielectric breakdown and result in a short circuit. The duration until dielectric breakdown depends on the applied voltage and the ambient temperature. 2-3. Operating voltage 1) Operating voltage across the terminals should be below the rated voltage. When AC and DC are super imposed, V0-P must be below the rated voltage. — (1) and (2) AC or pulse with overshooting, VP-P must be below the rated voltage. — (3), (4) and (5) When the voltage is started to apply to the circuit or it is stopped applying, the irregular voltage may be generated for a transit period because of resonance or switching. Be sure to use the capacitors within rated voltage containing these Irregular voltage.

Voltage	(1) DC voltage	(2) DC+AC voltage	(3) AC voltage
Positional Measurement (Rated voltage)	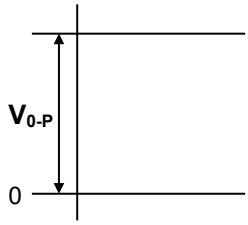	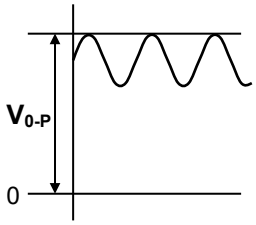	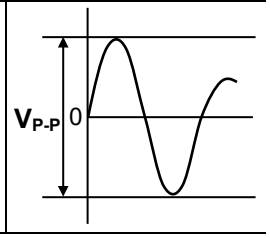

Voltage	(4) Pulse voltage (A)	(5) Pulse voltage (B)
Positional Measurement (Rated voltage)	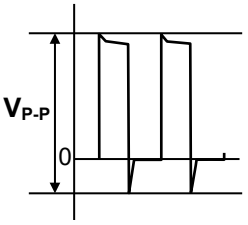	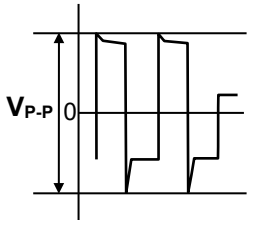

2) Even below the rated voltage, if repetitive high frequency AC or pulse is applied, the reliability of the capacitors may be reduced.

3) The effective capacitance will vary depending on applied DC and AC voltages. The capacitors should be selected and designed in taking the voltages into consideration.

4) Abnormal voltage (surge voltage, static electricity, pulse voltage, etc.) shall not exceed the rated voltage.

5) When capacitors are used in a series connection, it is necessary to add a balancing circuit such as voltage dividing resistors in order to avoid an imbalance in the voltage applied to each capacitor.

2-4. Frequency

When the capacitors (Class 2) are used in AC and/or pulse voltages, the capacitors may vibrate themselves and generate audible sound.

No.	Process	Condition
3	Designing P.C.board	The amount of solder at the terminations has a direct effect on the reliability of the capacitors. 1) The greater the amount of solder, the higher the stress on the chip capacitors, and the more likely that it will break. When designing a P.C.board, determine the shape and size of the solder lands to have proper amount of solder on the terminations. 2) Avoid using common solder land for multiple terminations and provide individual solder land for each terminations. 3) Size and recommended land dimensions.

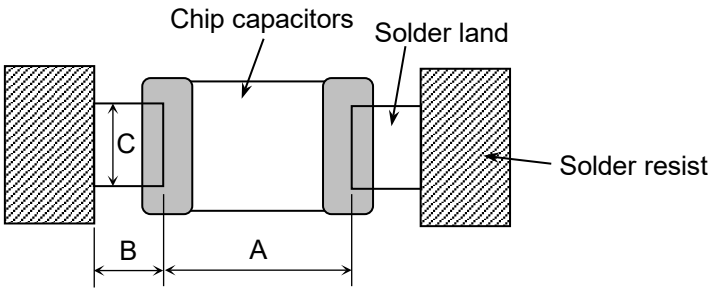

Reflow soldering (Unit : mm)

Symbol \ Case size	C0603 [CC0201]	C1005 [CC0402]	C1608 [CC0603]	C2012 [CC0805]
A	0.25 ~ 0.35	0.3 ~ 0.5	0.6 ~ 0.8	0.9 ~ 1.2
B	0.2 ~ 0.3	0.35 ~ 0.45	0.6 ~ 0.8	0.7 ~ 0.9
C	0.25 ~ 0.35	0.4 ~ 0.6	0.6 ~ 0.8	0.9 ~ 1.2

Symbol \ Case size	C3216 [CC1206]	C3225 [CC1210]	C4532 [CC1812]	C5750 [CC2220]
A	2.0 ~ 2.4	2.0 ~ 2.4	3.1 ~ 3.7	4.1 ~ 4.8
B	1.0 ~ 1.2	1.0 ~ 1.2	1.2 ~ 1.4	1.2 ~ 1.4
C	1.1 ~ 1.6	1.9 ~ 2.5	2.4 ~ 3.2	4.0 ~ 5.0

Flow soldering (Unrecommend) (Unit : mm)

Symbol \ Case size	C1608 [CC0603]	C2012 [CC0805]	C3216 [CC1206]
A	0.7 ~ 1.0	1.0 ~ 1.3	2.1 ~ 2.5
B	0.8 ~ 1.0	1.0 ~ 1.2	1.1 ~ 1.3
C	0.6 ~ 0.8	0.8 ~ 1.1	1.0 ~ 1.3

No.	Process	Condition
3	Designing P.C.board	4) Recommended chip capacitors layout is as following.

	Disadvantage against bending stress	Advantage against bending stress
Mounting face	Perforation or slit 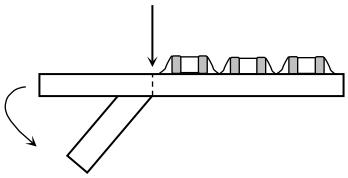 Break P.C.board with mounted side up.	Perforation or slit 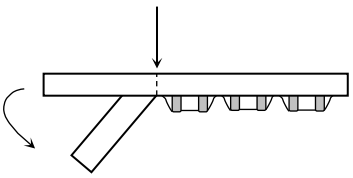 Break P.C.board with mounted side down.
Chip arrangement (Direction)	Mount perpendicularly to perforation or slit Perforation or slit 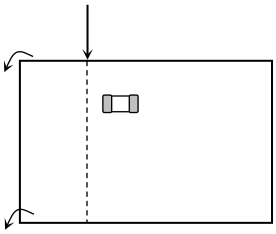	Mount in parallel with perforation or slit Perforation or slit 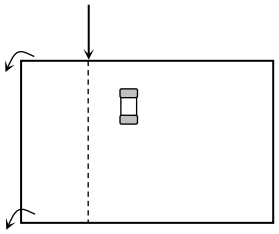
Distance from slit	Closer to slit is higher stress 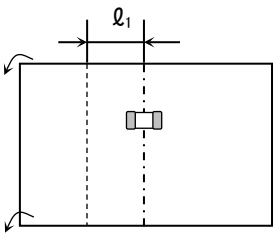 ($\ell_1 < \ell_2$)	Away from slit is less stress 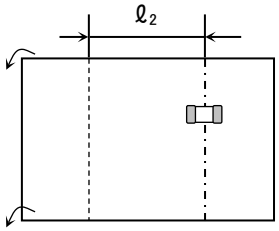 ($\ell_1 < \ell_2$)

No.	Process	Condition
3	Designing P.C.board	5) Mechanical stress varies according to location of chip capacitors on the P.C.board.

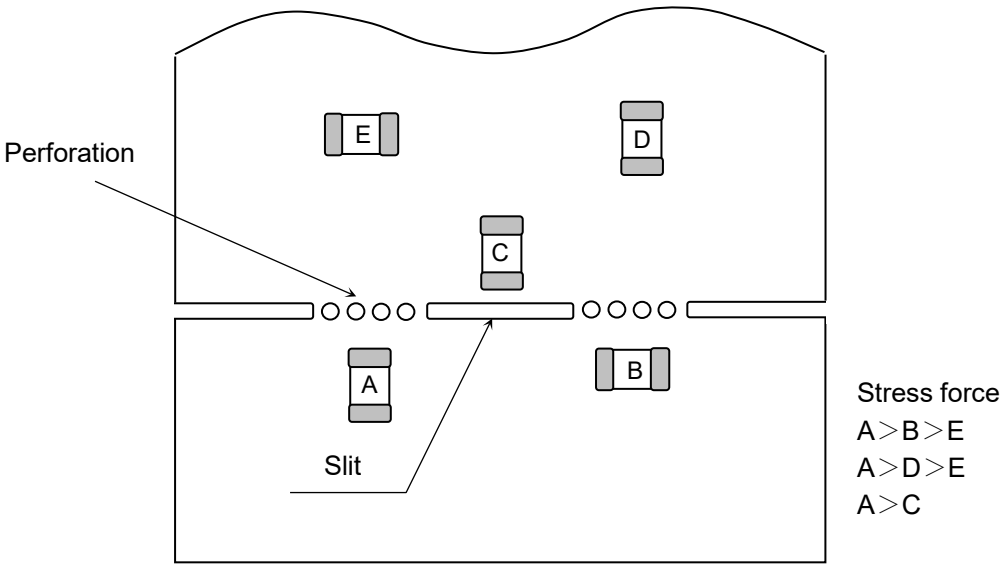

When dividing printed wiring boards, the intensities of mechanical stress applied to capacitors are different according to each dividing method in the order of :
Push-back < Slit < V-groove < Perforation. Therefore consider not only position of capacitors, but also the way of the dividing the printed wiring boards.

6) Layout recommendation

Example	Use of common solder land	Soldering with chassis	Use of common solder land with other SMD
Need to avoid	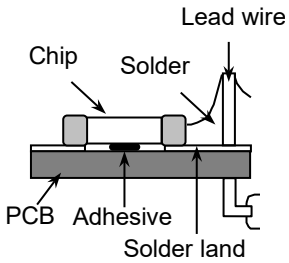	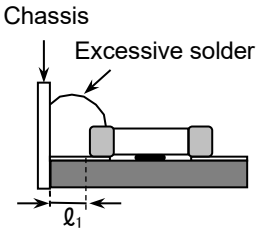	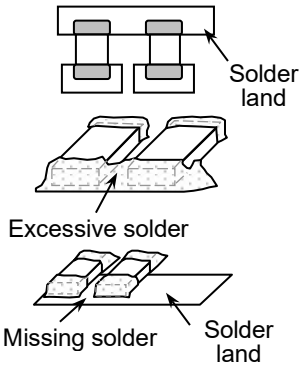
Recommen-dation	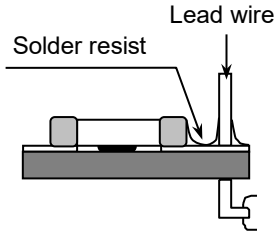	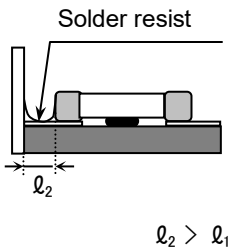	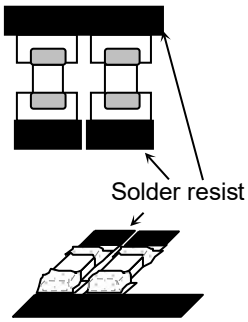

No.	Process	Condition
4	Mounting	4-1. Stress from mounting head If the mounting head is adjusted too low, it may induce excessive stress in the chip capacitors to result in cracking. Please take following precautions. 1) Adjust the bottom dead center of the mounting head to reach on the P.C.board surface and not press it. 2) Adjust the mounting head pressure to be 1 to 3N of static weight. 3) To minimize the impact energy from mounting head, it is important to provide support from the bottom side of the P.C.board. See following examples.

	Not recommended	Recommended
Single-sided mounting	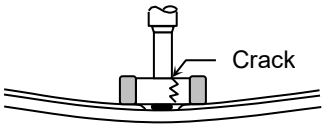	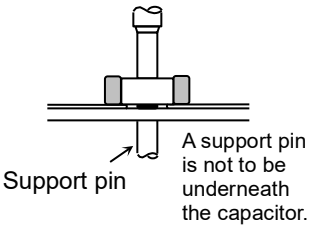
Double-sides mounting	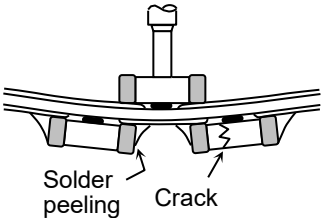	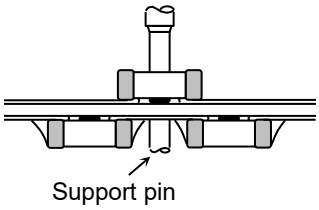

When the centering jaw is worn out, it may give mechanical impact on the capacitors to cause crack. Please control the close up dimension of the centering jaw and provide sufficient preventive maintenance and replacement of it.

4-2. Amount of adhesive

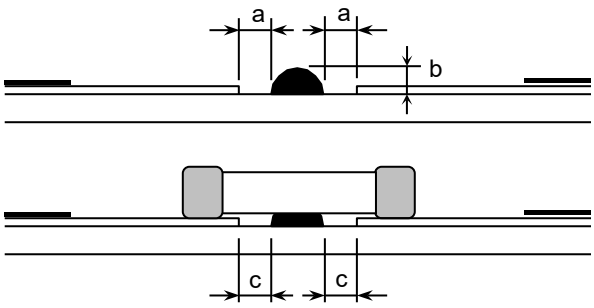

Example : C2012 [CC0805], C3216 [CC1206]

a	0.2mm min.
b	70 ~ 100μm
c	Do not touch the solder land

No.	Process	Condition
5	Soldering	5-1. Flux selection Flux can seriously affect the performance of capacitors. Confirm the following to select the appropriate flux. 1) It is recommended to use a mildly activated rosin flux (less than 0.1wt% chlorine). Strong flux is not recommended. 2) Excessive flux must be avoided. Please provide proper amount of flux. 3) When water-soluble flux is used, enough washing is necessary. 5-2. Recommended soldering profile : Reflow method Refer to the following temperature profile at Reflow soldering. Reflow soldering 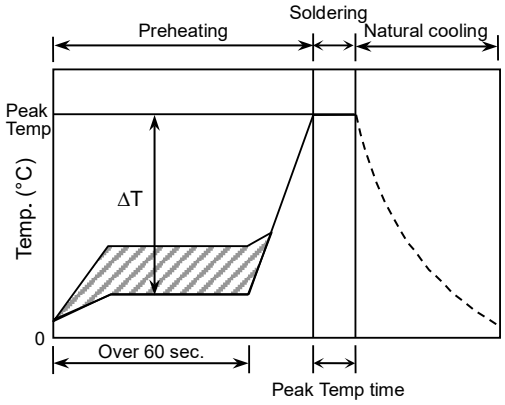 Reflow soldering is recommended for C1608,C2012,C3216 types, but only reflow soldering is allowed for other case sizes. 5-3. Recommended soldering peak temp and peak temp duration for Reflow soldering Pb free solder is recommended, but if Sn-37Pb must be used, refer to below. Temp./Duration / Solder: Reflow soldering — Peak temp(°C) / Duration(sec.) Lead Free Solder: 260 max. / 10 max. Sn-Pb Solder: 230 max. / 20 max. Recommended solder compositions Lead Free Solder : Sn-3.0Ag-0.5Cu

No.	Process	Condition
5	Soldering	

5-4. Soldering profile : Flow method (Unrecommend)
Refer to the following temperature profile at Flow soldering.

Flow soldering

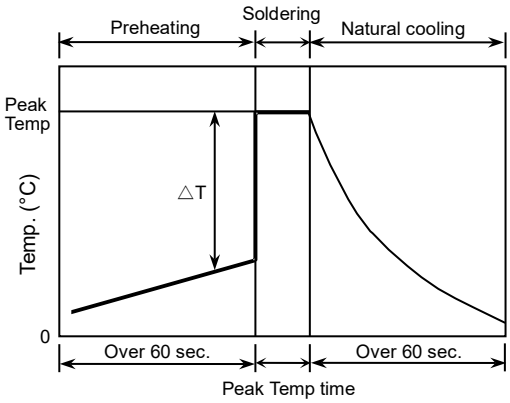

Reflow soldering is recommended for C1608,C2012,C3216 types.

5-5. Recommended soldering peak temp and peak temp duration for Flow soldering
Pb free solder is recommended, but if Sn-37Pb must be used, refer to below.

Temp./Duration / Solder	Flow soldering	
	Peak temp(°C)	Duration(sec.)
Lead Free Solder	260 max.	5 max.
Sn-Pb Solder	250 max.	3 max.

Recommended solder compositions
Lead Free Solder : Sn-3.0Ag-0.5Cu

5-6. Avoiding thermal shock

1) Preheating condition

Soldering	Case size	Temp. (°C)
Reflow soldering	C0603(CC0201),C1005(CC0402), C1608(CC0603),C2012(CC0805), C3216(CC1206)	ΔT ≦ 150
	C3225(CC1210), C4532(CC1812), C5750(CC2220)	ΔT ≦ 130
Flow soldering	C1608(CC0603),C2012(CC0805), C3216(CC1206)	ΔT ≦ 150

2) Cooling condition
Natural cooling using air is recommended. If the chips are dipped into a solvent for cleaning, the temperature difference (ΔT) must be less than 100°C.

No.	Process	Condition
5	Soldering	5-7. Amount of solder Excessive solder will induce higher tensile force in chip capacitors when temperature changes and it may result in chip cracking. In sufficient solder may detach the capacitors from the P.C.board. Excessive solder 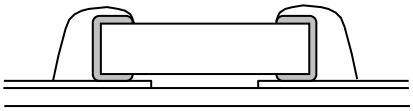 Higher tensile force in chip capacitors to cause crack Adequate 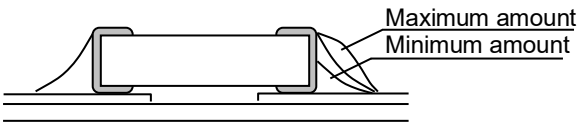 Insufficient solder 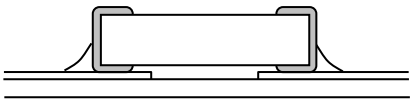 Low robustness may cause contact failure or chip capacitors come off the P.C.board. 5-8. Sn-Zn solder Sn-Zn solder affects product reliability. Please contact TDK in advance when utilize Sn-Zn solder. 5-9. Countermeasure for tombstone The misalignment between the mounted positions of the capacitors and the land patterns should be minimized. The tombstone phenomenon may occur especially the capacitors are mounted (in longitudinal direction) in the same direction of the reflow soldering. (Refer to JEITA RCR-2335C Annex A (Informative), Recommendations to prevent the tombstone phenomenon.)

No.	Process	Condition
6	Solder repairing	Solder repairing is unavoidable, refer to below. 6-1.Soldering rework using spot heater Heat stress during rework may possibly be reduced by using a spot heater (also called a “blower”) rather than a soldering iron. It is applied only to adding solder in the case of insufficient solder amount. 1) Reworking using a spot heater may suppress the occurrence of cracks in the capacitor compared to using a soldering iron. A spot heater can heat up a capacitor uniformly with a small heat gradient which leads to lower thermal stress caused by quick heating and cooling or localized heating. Moreover, where ultra-small capacitors are mounted close together on a printed circuit board, reworking with a spot heater can eliminate the risk of direct contact between the tip of a soldering iron and a capacitor. 2) Rework condition If the blower nozzle of a spot heater is too close to a capacitor, a crack in the capacitor may occur due to heat stress. Below are recommendations for avoiding such an occurrence. Keep more than 5mm between a capacitor and a spot heater nozzle. The blower temperature of the spot heater shall be lower than 400°C. The airflow shall be set as weak as possible. The diameter of the nozzle is recommended to be 2mm(one-outlet type).The size is standard and common. Duration of blowing hot air is recommended to be 10s or less for C1608(CC0603), C2012(CC0805) and C3216(CC1206), and 30s or less for C3225(CC1210), C4532(CC1812) and C5750(CC2220), considering surface area of the capacitor and melting temperature of solder. The angle between the nozzle and the capacitor is recommended to be 45degrees in order to work easily and to avoid partial area heating. As is the case when using a soldering iron, preheating reduces thermal stress on capacitors and improves operating efficiency. ・Recommended rework condition（Consult the component manufactures for details.） <table><tr><td>Distance from nozzle</td><td>5mm and over</td></tr><tr><td>Nozzle angle</td><td>45degrees</td></tr><tr><td>Nozzle temp.</td><td>400°C and less</td></tr><tr><td>Airflow</td><td>Set as weak as possible (The airflow shall be the minimum value necessary for solder to melt in the conditions mentioned above.)</td></tr><tr><td>Nozzle diameter</td><td>⌀2mm（one-outlet type）</td></tr><tr><td>Blowing duration</td><td>10s and less (C1608[CC0603], C2012[CC0805], C3216[CC1206]) 30s and less (C3225[CC1210], C4532[CC1812], C5750[CC2220])</td></tr></table> ・Example of recommended spot heater use 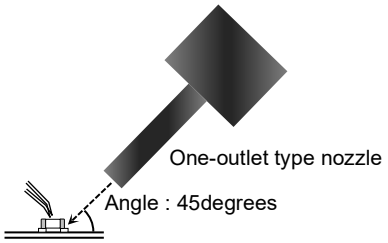 3) Amount of solder should be suitable to from a proper fillet shape. Excess solder causes mechanical and thermal stress on a capacitor and results in cracks. Insufficient solder causes weak adherence of the capacitor to the substrate and may result in detachment of a capacitor and deteriorate reliability of the printed wiring board. See the example of appropriate solder fillet shape for 5-7.Amount of solder.

No.	Process	Condition
6	Solder repairing	6-2. Solder repair by solder iron

1) Selection of the soldering iron tip
Tip temperature of solder iron varies by its type, P.C.board material and solder land size. The higher the tip temperature, the quicker the operation. However, heat shock may cause a crack in the chip capacitors.
Please make sure the tip temp. before soldering and keep the peak temp and time in accordance with following recommended condition.

Manual soldering
(Solder iron)

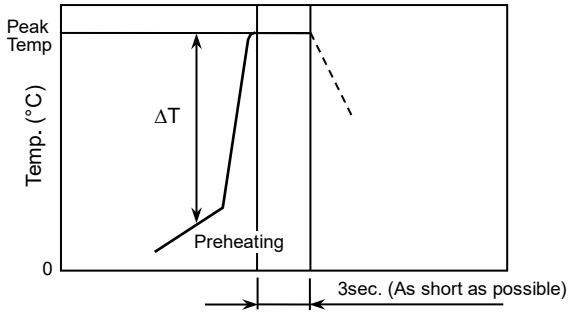

Recommended solder iron condition (Sn-Pb Solder and Lead Free Solder)

Case size	Temp. (°C)	Duration (sec.)	Wattage (W)	Shape (mm)
C0603(CC0201) C1005(CC0402) C1608(CC0603) C2012(CC0805) C3216(CC1206)	350 max.	3 max.	20 max.	⌀3.0 max.
C3225(CC1210) C4532(CC1812) C5750(CC2220)	280 max.			

* Please preheat the chip capacitors with the condition in 6-3 to avoid the thermal shock.

2) Direct contact of the soldering iron with ceramic dielectric of chip capacitors may cause crack. Do not touch the ceramic dielectric and the terminations by solder iron.

3) It is not recommended to reuse dismounted capacitors.

6-3. Avoiding thermal shock

Preheating condition

Soldering	Case size	Temp. (°C)
Manual soldering	C0603(CC0201),C1005(CC0402), C1608(CC0603),C2012(CC0805), C3216(CC1206)	ΔT ≦ 150
	C3225(CC1210), C4532(CC1812), C5750(CC2220)	ΔT ≦ 130

No.	Process	Condition
7	Cleaning	1) If an unsuitable cleaning fluid is used, flux residue or some foreign articles may stick to chip capacitors surface to deteriorate especially the insulation resistance. 2) If cleaning condition is not suitable, it may damage the chip capacitors. 2)-1. Insufficient washing (1) Terminal electrodes may corrode by Halogen in the flux. (2) Halogen in the flux may adhere on the surface of capacitors, and lower the insulation resistance. (3) Water soluble flux has higher tendency to have above mentioned problems (1) and (2). 2)-2. Excessive washing When ultrasonic cleaning equipment is used, excessive ultrasonic power or direct vibration transfer to a printed wiring board may generate a resonant vibration in the board. This may cause a crack in a capacitor or its solder joints to the board and degradation in the terminal strength of the capacitor. In order to avoid this, the following cleaning conditions are recommended. Power : 20 W/ℓ max. Frequency : 40 kHz max. Washing time : 5 minutes max. 2)-3. If the cleaning fluid is contaminated, density of Halogen increases, and it may bring the same result as insufficient cleaning.
8	Coating and molding of the P.C.board	1) When the P.C.board is coated, please verify the quality influence on the product. 2) Please verify carefully that there is no harmful decomposing or reaction gas emission during curing which may damage the chip capacitors. 3) Please verify the curing temperature.

No.	Process	Condition
9	Handling after chip mounted ⚠ Caution	1) Please pay attention not to bend or distort the P.C.board after soldering in handling otherwise the chip capacitors may crack. 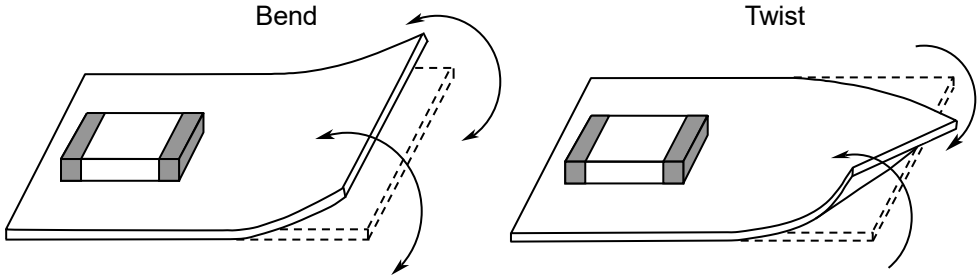 2) Printed circuit board cropping should not be carried out by hand, but by using the proper tooling. Printed circuit board cropping should be carried out using a board cropping jig as shown in the following figure or a board cropping apparatus to prevent inducing mechanical stress on the board. (1)Example of a board cropping jig Recommended example: The board should be pushed from the back side, close to the cropping jig so that the board is not bent and the stress applied to the capacitor is compressive. Unrecommended example: If the pushing point is far from the cropping jig and the pushing direction is from the front side of the board, large tensile stress is applied to the capacitor, which may cause cracks. 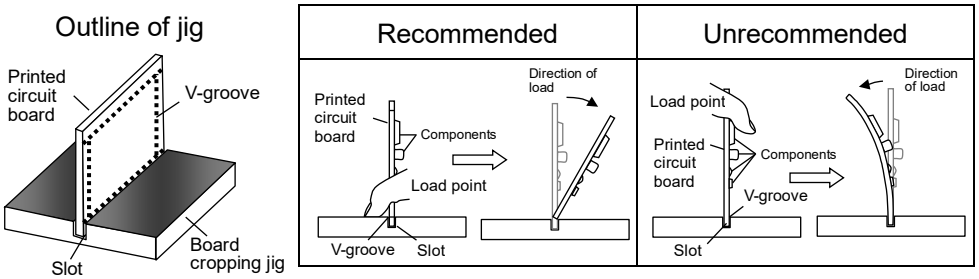

No.	Process	Condition
9	Handling after chip mounted ⚠ Caution	(2)Example of a board cropping machine An outline of a printed circuit board cropping machine is shown below. The top and bottom blades are aligned with one another along the lines with the V-grooves on printed circuit board when cropping the board. Unrecommended example: Misalignment of blade position between top and bottom, right and left, or front and rear blades may cause a crack in the capacitor. Outline of machine 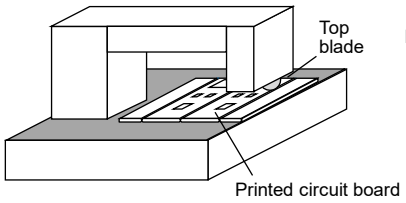 Principle of operation 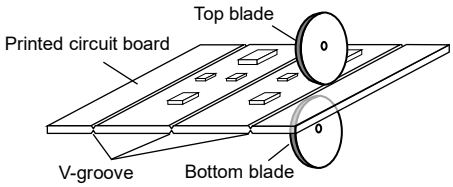 Cross-section diagram 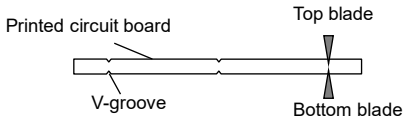 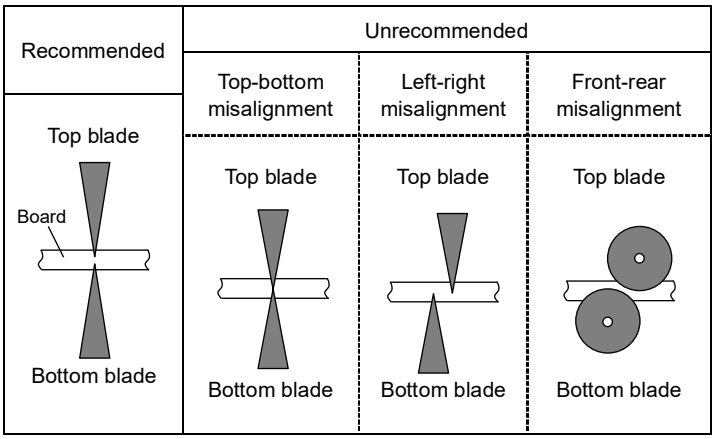 3) When functional check of the P.C.board is performed, check pin pressure tends to be adjusted higher for fear of loose contact. But if the pressure is excessive and bend the P.C.board, it may crack the chip capacitors or peel the terminations off. Please adjust the check pins not to bend the P.C.board. Item: Board bending Not recommended: 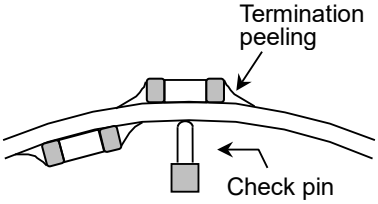 Recommended: 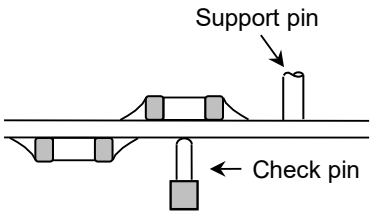

No.	Process	Condition
10	Handling of loose chip capacitors	1) If dropped the chip capacitors may crack. Once dropped do not use it. Especially, the large case sized chip capacitors are tendency to have cracks easily, so please handle with care. 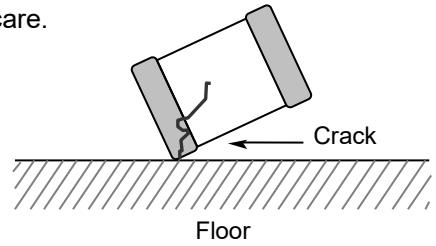 2) Piling the P.C.board after mounting for storage or handling, the corner of the P.C. board may hit the chip capacitors of another board to cause crack. 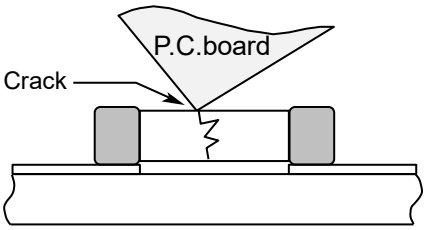
11	Capacitance aging	The capacitors (Class 2) have aging in the capacitance. They may not be used in precision time constant circuit. In case of the time constant circuit, the evaluation should be done well.
12	Estimated life and estimated failure rate of capacitors	As per the estimated life and the estimated failure rate depend on the temperature and the voltage. This can be calculated by the equation described in JEITA RCR-2335C Annex F (Informative) Calculation of the estimated lifetime and the estimated failure rate (Voltage acceleration coefficient : 3 multiplication rule, Temperature acceleration coefficient : 10°C rule) The failure rate can be decreased by reducing the temperature and the voltage but they will not be guaranteed.

No.	Process	Condition
13	Caution during operation of equipment	1) A capacitor shall not be touched directly with bare hands during operation in order to avoid electric shock. Electric energy held by the capacitor may be discharged through the human body when touched with a bare hand. Even when the equipment is off, a capacitor may stay charged. The capacitor should be handled after being completely discharged using a resistor. 2) The terminals of a capacitor shall not be short-circuited by any accidental contact with a conductive object. A capacitor shall not be exposed to a conductive liquid such as an acid or alkali solution. A conductive object or liquid, such as acid and alkali, between the terminals may lead to the breakdown of a capacitor due to short circuit. 3) Confirm that the environment to which the equipment will be exposed during transportation and operation meets the specified conditions. Do not to use the equipment in the following environments. (1) Environment where a capacitor is spattered with water or oil (2) Environment where a capacitor is exposed to direct sunlight (3) Environment where a capacitor is exposed to Ozone, ultraviolet rays or radiation (4) Environment where a capacitor exposed to corrosive gas(e.g. hydrogen sulfide, sulfur dioxide, chlorine. ammonia gas etc.) (5) Environment where a capacitor exposed to vibration or mechanical shock exceeding the specified limits. (6) Atmosphere change with causes condensation
14	Others ⚠ Caution	The products listed on this specification sheet are intended for use in general electronic equipment (AV equipment, telecommunications equipment, home appliances, amusement equipment, computer equipment, personal equipment, office equipment, measurement equipment, industrial robots) under a normal operation and use condition. The products are not designed or warranted to meet the requirements of the applications listed below, whose performance and/or quality require a more stringent level of safety or reliability, or whose failure, malfunction or trouble could cause serious damage to society, person or property. Please understand that we are not responsible for any damage or liability caused by use of the products in any of the applications below or for any other use exceeding the range or conditions set forth in this specification sheet. If you intend to use the products in the applications listed below or if you have special requirements exceeding the range or conditions set forth in this specification, please contact us. (1) Aerospace/Aviation equipment (2) Transportation equipment (cars, electric trains, ships, etc.) (3) Medical equipment (Excepting Pharmaceutical Affairs Law classification Class1, 2) (4) Power-generation control equipment (5) Atomic energy-related equipment (6) Seabed equipment (7) Transportation control equipment (8) Public information-processing equipment (9) Military equipment (10) Electric heating apparatus, burning equipment (11) Disaster prevention/crime prevention equipment (12) Safety equipment (13) Other applications that are not considered general-purpose applications When designing your equipment even for general-purpose applications, you are kindly requested to take into consideration securing protection circuit/device or providing backup circuits in your equipment.

13. TAPE PACKAGING SPECIFICATION

1. CONSTRUCTION AND DIMENSION OF TAPING

1-1. Dimensions of carrier tape

Dimensions of paper tape shall be according to Appendix 3, 4, 5.
Dimensions of plastic tape shall be according to Appendix 6, 7.

1-2. Bulk part and leader of taping

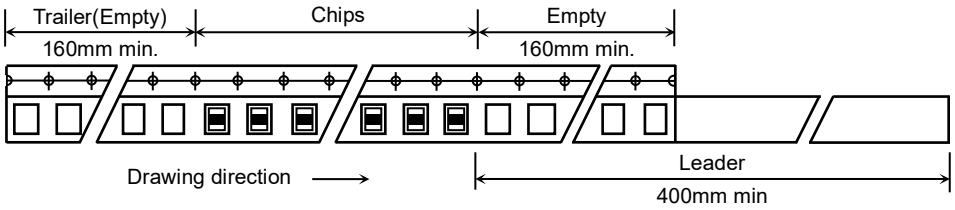

1-3. Dimensions of reel

Dimensions of ⌀178 reel shall be according to Appendix 8, 9.
Dimensions of ⌀330 reel shall be according to Appendix 10, 11.

1-4. Structure of taping

<Paper>

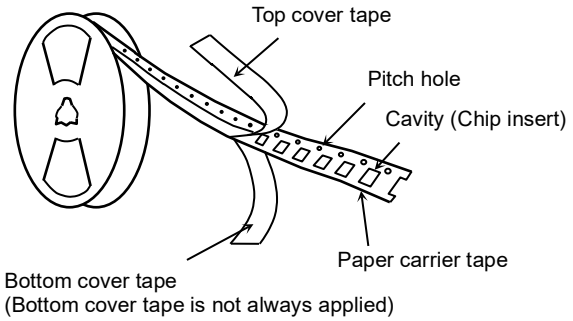

<Plastic>

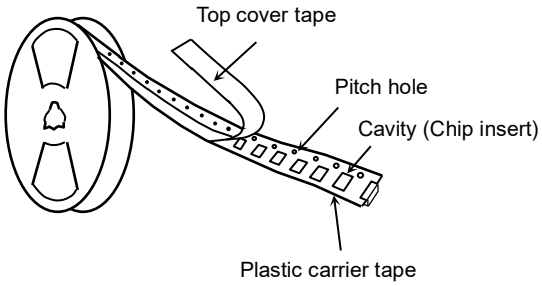

2. CHIP QUANTITY

Please refer to detail page on TDK web.

3. PERFORMANCE SPECIFICATIONS

3-1. Fixing peeling strength (top tape)

0.05N < Peeling strength < 0.7N

<Paper>

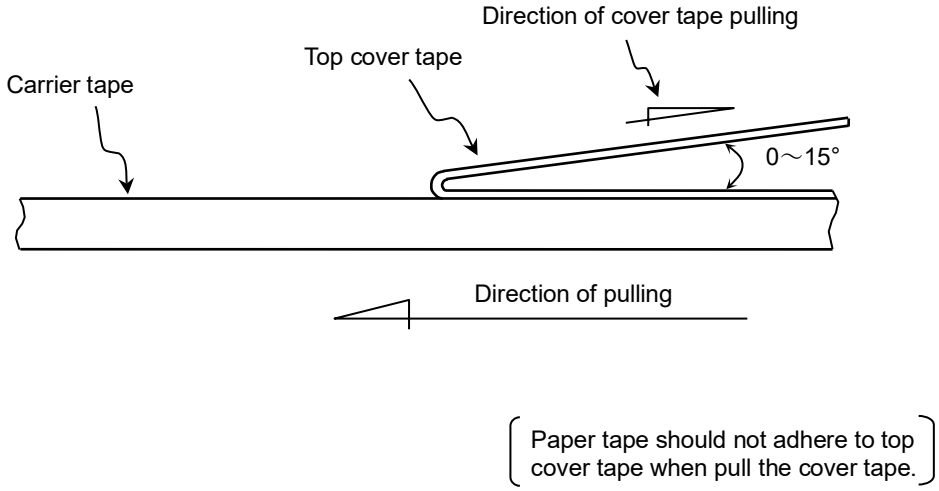

<Plastic>

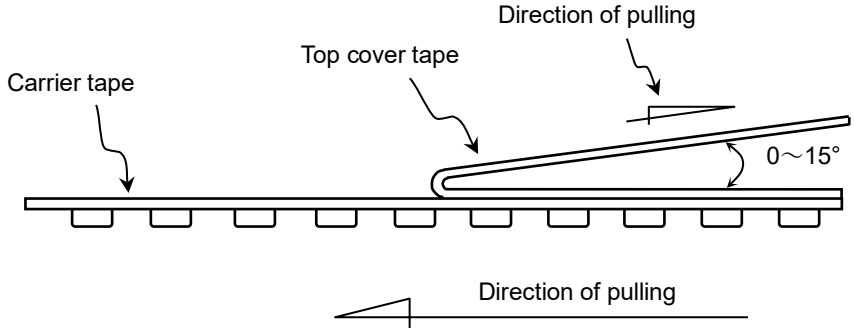

3-2. Carrier tape shall be flexible enough to be wound around a minimum radius of 30mm with components in tape.

3-3. The missing of components shall be less than 0.1%

3-4. Components shall not stick to fixing tape.

3-5. When removing the cover tape, there shall not be difficulties by unfitting clearance gap, burrs and crushes of cavities. Also the sprocket holes shall not be covered by absorbing dust into the suction nozzle.

Appendix 3

Paper Tape

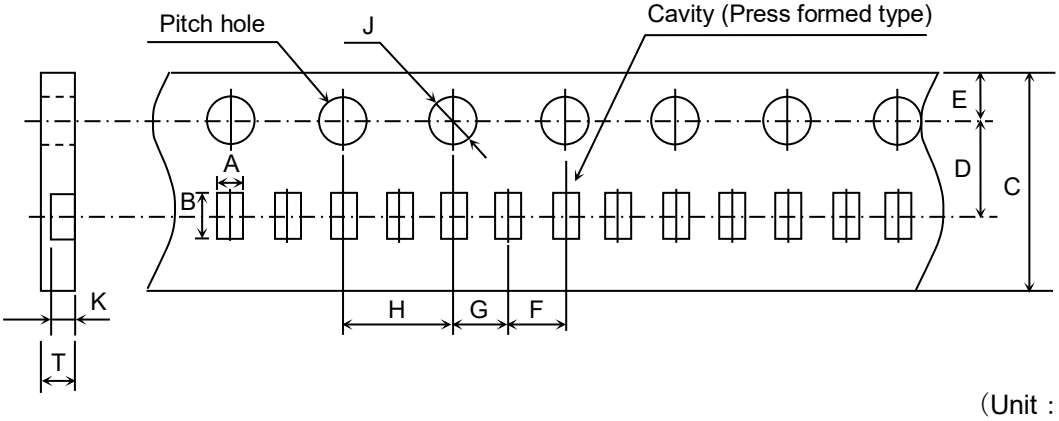

(Unit : mm)

Symbol / Case size	A	B	C	D	E	F
C0603 (CC0201)	(0.38) ∗(0.40)	(0.68) ∗(0.70)	8.00±0.30	3.50±0.05	1.75±0.10	2.00±0.05

Symbol / Case size	G	H	J	K	T
C0603 (CC0201)	2.00±0.05	4.00±0.10	⌀ 1.50 $^{+0.10}_{0}$	0.35±0.02 ∗0.38±0.02	0.40 min.

( ) Reference value.

∗ Applied to thickness, 0.30±0.05mm products.

Appendix 4

Paper Tape

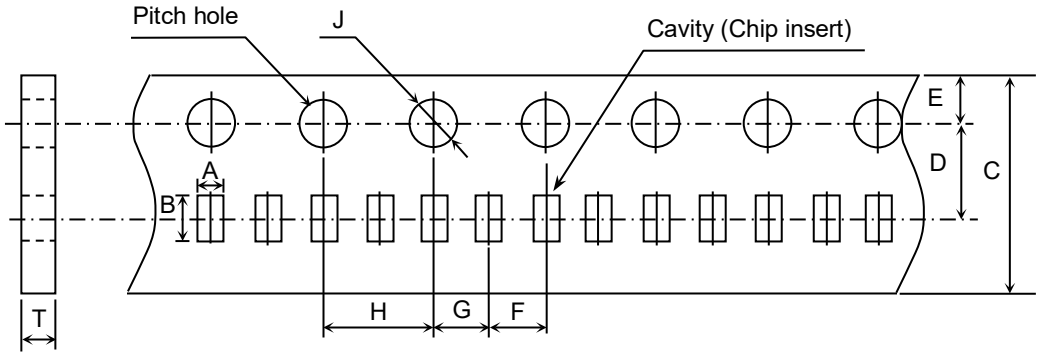

(Unit : mm)

Symbol / Case size	A	B	C	D	E	F
C1005 [CC0402]	(0.65) ∗ (0.73)	(1.15) ∗ (1.23)	8.00 ± 0.30	3.50 ± 0.05	1.75 ± 0.10	2.00 ± 0.05

Symbol / Case size	G	H	J	T
C1005 [CC0402]	2.00 ± 0.05	4.00 ± 0.10	⌀ 1.50 $^{+0.10}_{0}$	0.60±0.05 ∗ 0.68±0.05

( ) Reference value.

∗ Applied to thickness, 0.50±0.10mm and 0.50 +0.15,-0.10mm products.

Appendix 5

Paper Tape

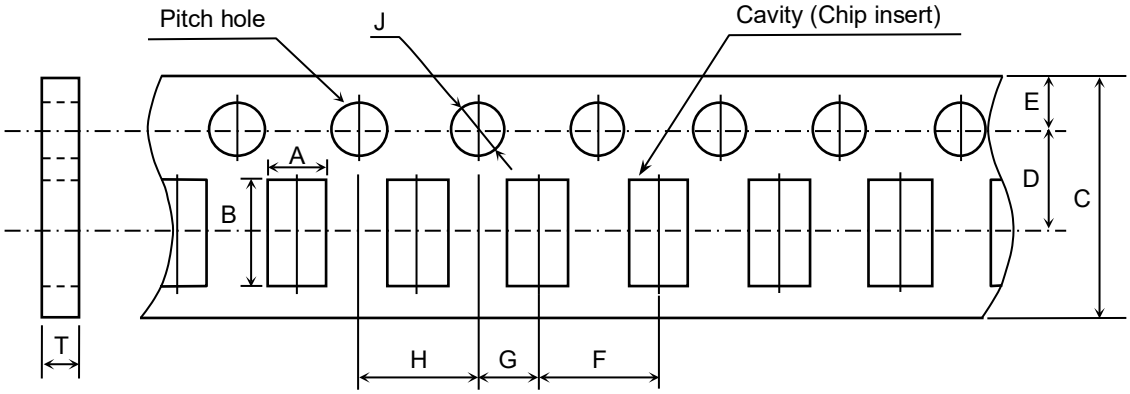

(Unit : mm)

Symbol / Case size	A	B	C	D	E	F
C1608 [CC0603]	(1.10)	(1.90)	8.00 ± 0.30	3.50 ± 0.05	1.75 ± 0.10	4.00 ± 0.10
C2012 [CC0805]	(1.50)	(2.30)				
C3216 [CC1206]	(1.90)	(3.50)				

Symbol / Case size	G	H	J	T
C1608 [CC0603]	2.00 ± 0.05	4.00 ± 0.10	⌀ 1.50 $^{+0.10}_{0}$	1.20 max.
C2012 [CC0805]				
C3216 [CC1206]				

( ) Reference value.

Appendix 6

Plastic Tape

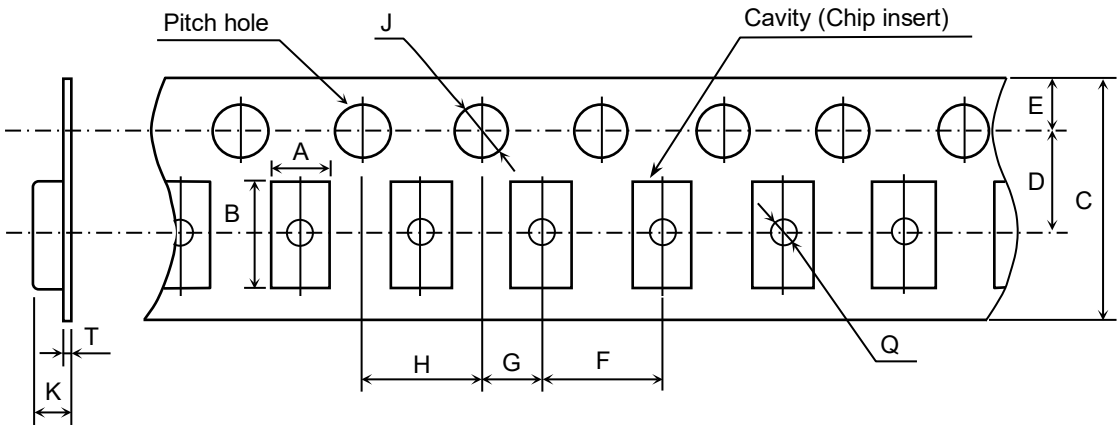

(Unit : mm)

Symbol / Case size	A	B	C	D	E	F
C2012 [CC0805]	(1.50)	(2.30)	8.00 ± 0.30	3.50 ± 0.05	1.75 ± 0.10	4.00 ± 0.10
C3216 [CC1206]	(1.90)	(3.50)	*12.00 ± 0.30	*5.50 ± 0.05		
C3225 [CC1210]	(2.90)	(3.60)				

Symbol / Case size	G	H	J	K	T	Q
C2012 [CC0805]	2.00 ± 0.05	4.00 ± 0.10	⌀ 1.50 $^{+0.10}_{0}$	2.50 max.	0.60 max.	⌀ 0.50 min.
C3216 [CC1206]						
C3225 [CC1210]				3.40 max.		

( ) Reference value.
* Applied to thickness, 2.5mm products.
Exceptionally no hole in the cavity is applied. Please inquire if hole in cavity is mandatory.

Appendix 7

Plastic Tape

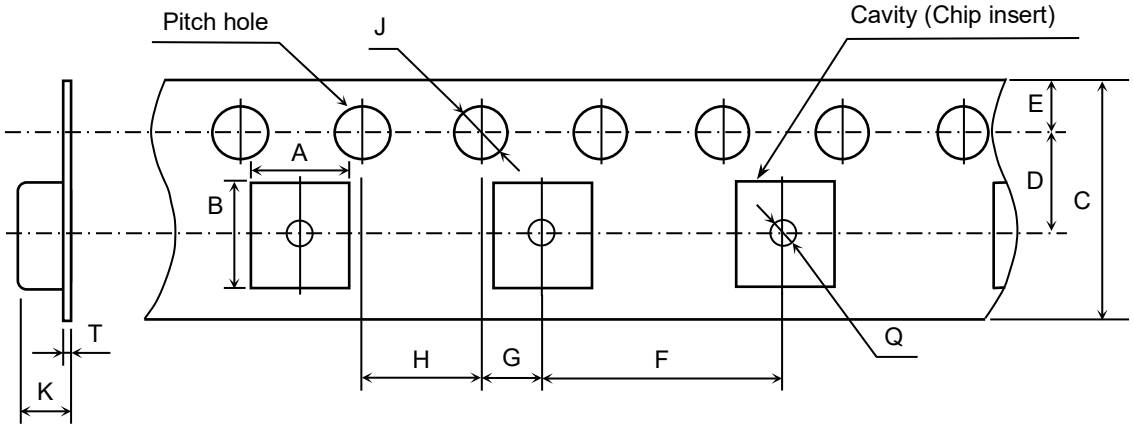

(Unit : mm)

Symbol / Case size	A	B	C	D	E	F
C4532 [CC1812]	(3.60)	(4.90)	12.00 ± 0.30	5.50 ± 0.05	1.75 ± 0.10	8.00 ± 0.10
C5750 [CC2220]	(5.40)	(6.10)				

Symbol / Case size	G	H	J	K	T	Q
C4532 [CC1812]	2.00 ± 0.05	4.00 ± 0.10	⌀ $1.50^{+0.10}_{0}$	6.50 max.	0.60 max.	⌀ 1.50 min.
C5750 [CC2220]						

( ) Reference value.
Exceptionally no hole in the cavity is applied. Please inquire if hole in cavity is mandatory.

Appendix 8

Dimensions of reel (Material : Polystyrene)
C0603, C1005, C1608, C2012, C3216, C3225

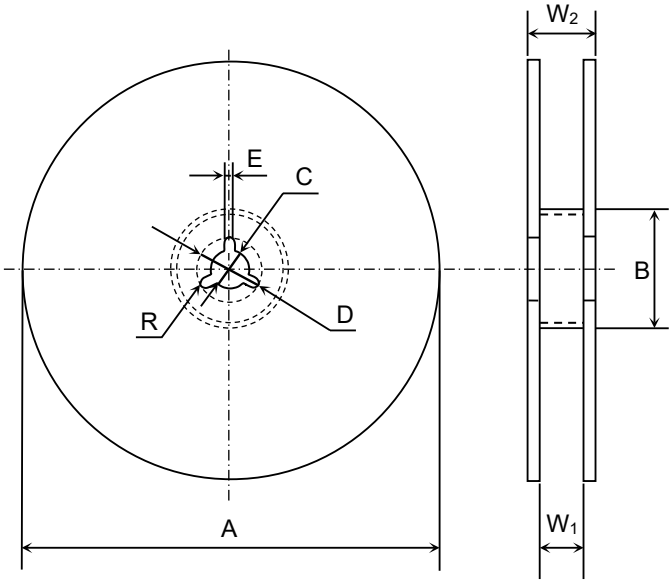

(Unit : mm)

Symbol	A	B	C	D	E	W_1
Dimension	⌀ 178 ± 2.0	⌀ 60 ± 2.0	⌀ 13 ± 0.5	⌀ 21 ± 0.8	2.0 ± 0.5	9.0 ± 0.3

Symbol	W_2	R
Dimension	13.0 ± 1.4	1.0

Appendix 9

Dimensions of reel (Material : Polystyrene)
C3225(2.5mm thickness products), C4532, C5750

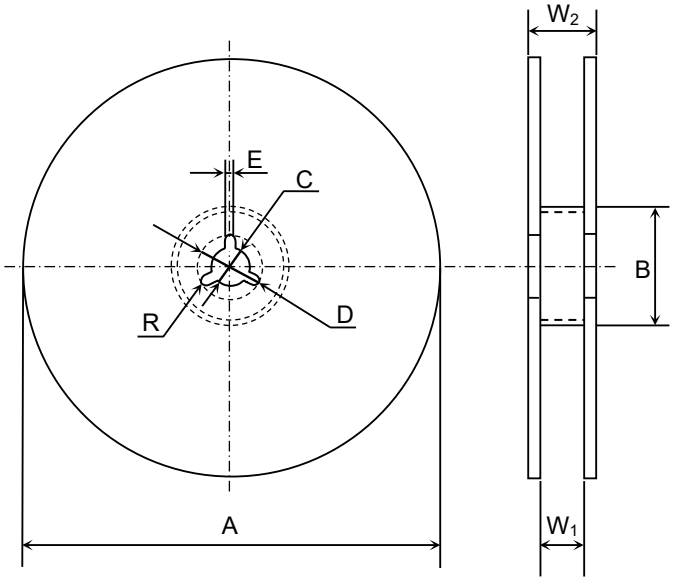

(Unit : mm)

Symbol	A	B	C	D	E	W_1
Dimension	⌀ 178 ± 2.0	⌀ 60 ± 2.0	⌀ 13 ± 0.5	⌀ 21 ± 0.8	2.0 ± 0.5	13.0 ± 0.3

Symbol	W_2	R
Dimension	17.0 ± 1.4	1.0

Appendix 10

Dimensions of reel (Material : Polystyrene)
C0603, C1005, C1608, C2012, C3216, C3225

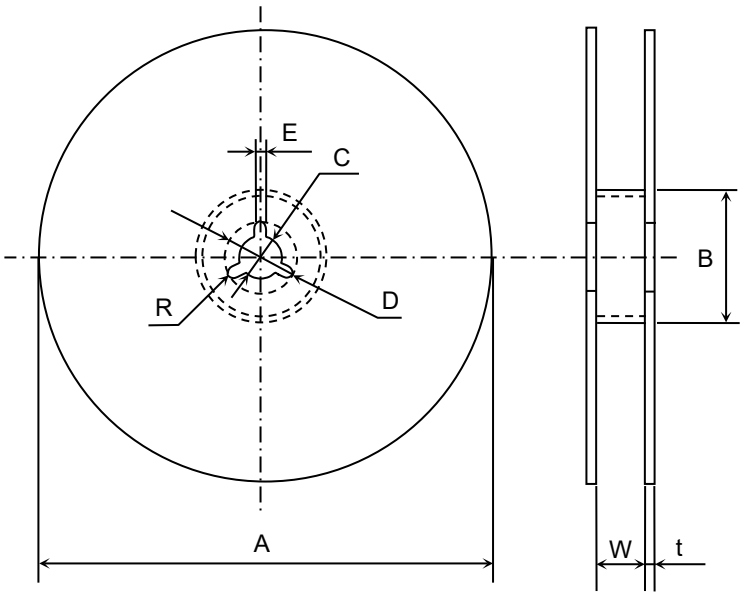

(Unit : mm)

Symbol	A	B	C	D	E	W
Dimension	⌀ 382 max. (Nominal ⌀ 330)	⌀ 50 min.	⌀ 13 ± 0.5	⌀ 21 ± 0.8	2.0 ± 0.5	10.0 ± 1.5

Symbol	t	R
Dimension	2.0 ± 0.5	1.0

Appendix 11

Dimensions of reel (Material : Polystyrene)
C3225(2.5mm thickness products), C4532, C5750

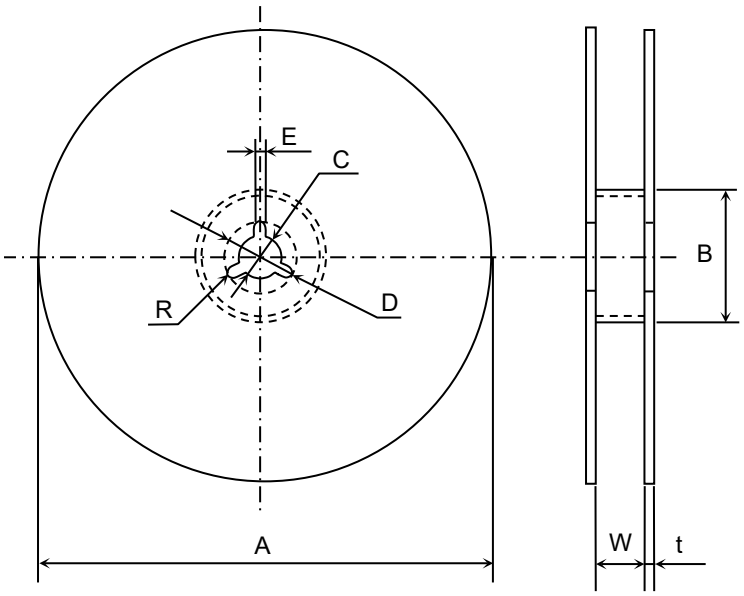

(Unit : mm)

Symbol	A	B	C	D	E	W
Dimension	⌀ 382 max. (Nominal ⌀ 330)	⌀ 50 min.	⌀ 13 ± 0.5	⌀ 21 ± 0.8	2.0 ± 0.5	14.0 ± 1.5

Symbol	t	R
Dimension	2.0 ± 0.5	1.0