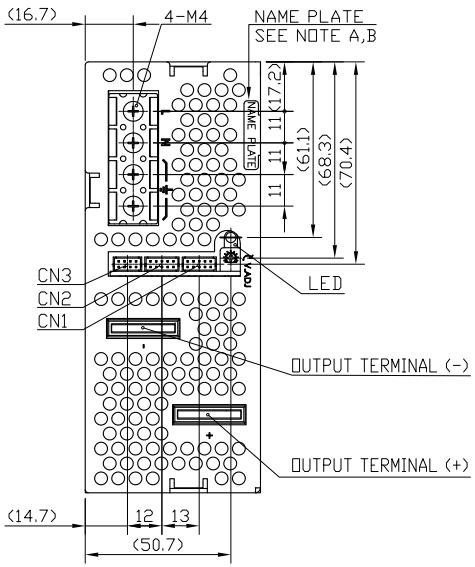

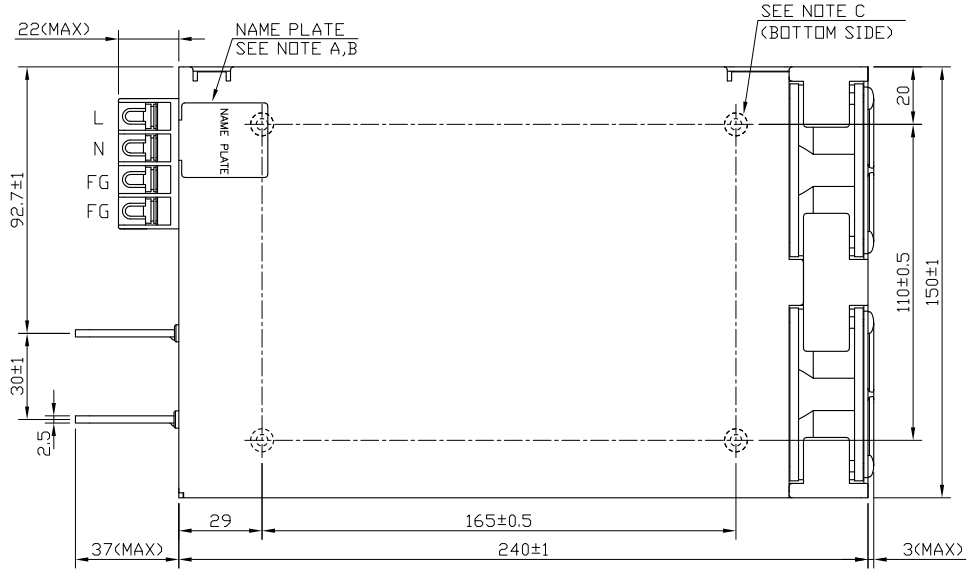

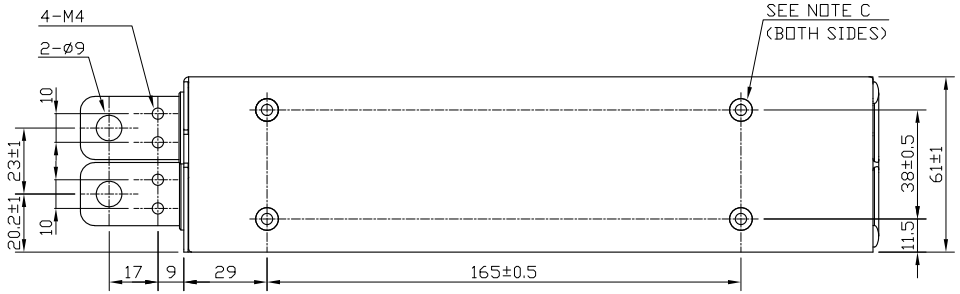

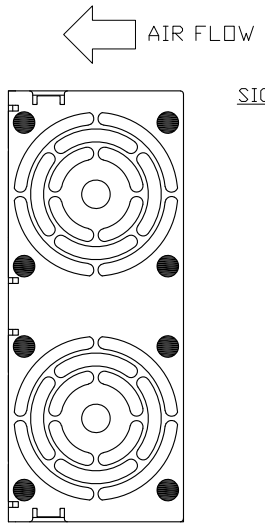

SIGNAL CONNECTOR INFORMATION

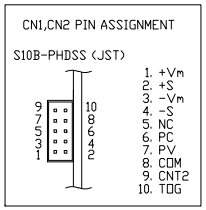

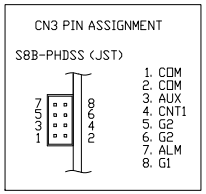

== ACCESSORIES ==

* SHORT PIECE ----------1
  SHORTING +Vm—+S, -Vm—-S
  (ATTACHED ON CN1 AT SHIPMENT)

== SIGNAL CONNECTOR USED ==

PART DESCRIPTION	PART NAME	MANUFACT
PIN HEADER (CN1 & CN2)	S10B-PHDSS	JST
PIN HEADER (CN3)	S8B-PHDSS	JST

== MATCHING HOUSINGS , PINS & TOOL ==

PART DESCRIPTION	PART NAME	MANUFACT
SOCKET HOUSING (CN1 & CN2)	PHDR-10VS	JST
SOCKET HOUSING (CN3)	PHDR-8VS	JST
TERMINAL PINS	SPHD-002T-P0.5(AWG28~24) SPHD-001T-P0.5(AWG26~22)	JST
HAND CRIMPING TOOL	YRS-620(SPHD-002T-P0.5) YC-610R(SPHD-001T-P0.5)	JST

== NOTES ==

A : MODEL NAME, INPUT VOLTAGE RANGE, NOMINAL OUTPUT VOLTAGE, NOMINAL OUTPUT CURRENT, PEAK OUTPUT CURRENT AND SAFETY MARKING(FOR ONLY APPROVED PRODUCTS) ARE SHOWN ON THE NAME PLATE IN ACCORDANCE WITH THE SPECIFICATIONS.

B : COUNTRY OF MANUFACTURE IS SHOWN HERE.

C : M4 TAPPED HOLES (12) FOR CUSTOMER CHASSIS MOUNTING. (SCREW PENETRATION DEPTH 6m/m MAX.)

(unit : mm)

MODEL NAME	SWS1000L
TDK-Lambda	

PA578-02-01D