Unless otherwise specified dimensional tolerance as follows:	
DIMENSION L (mm)	TOLERANCE ±mm
L≦ 16.0	0.1
16.0＜L≦ 63.0	0.2
63.0＜L≦ 250.0	0.3
250.0＜L≦1000.0	0.5

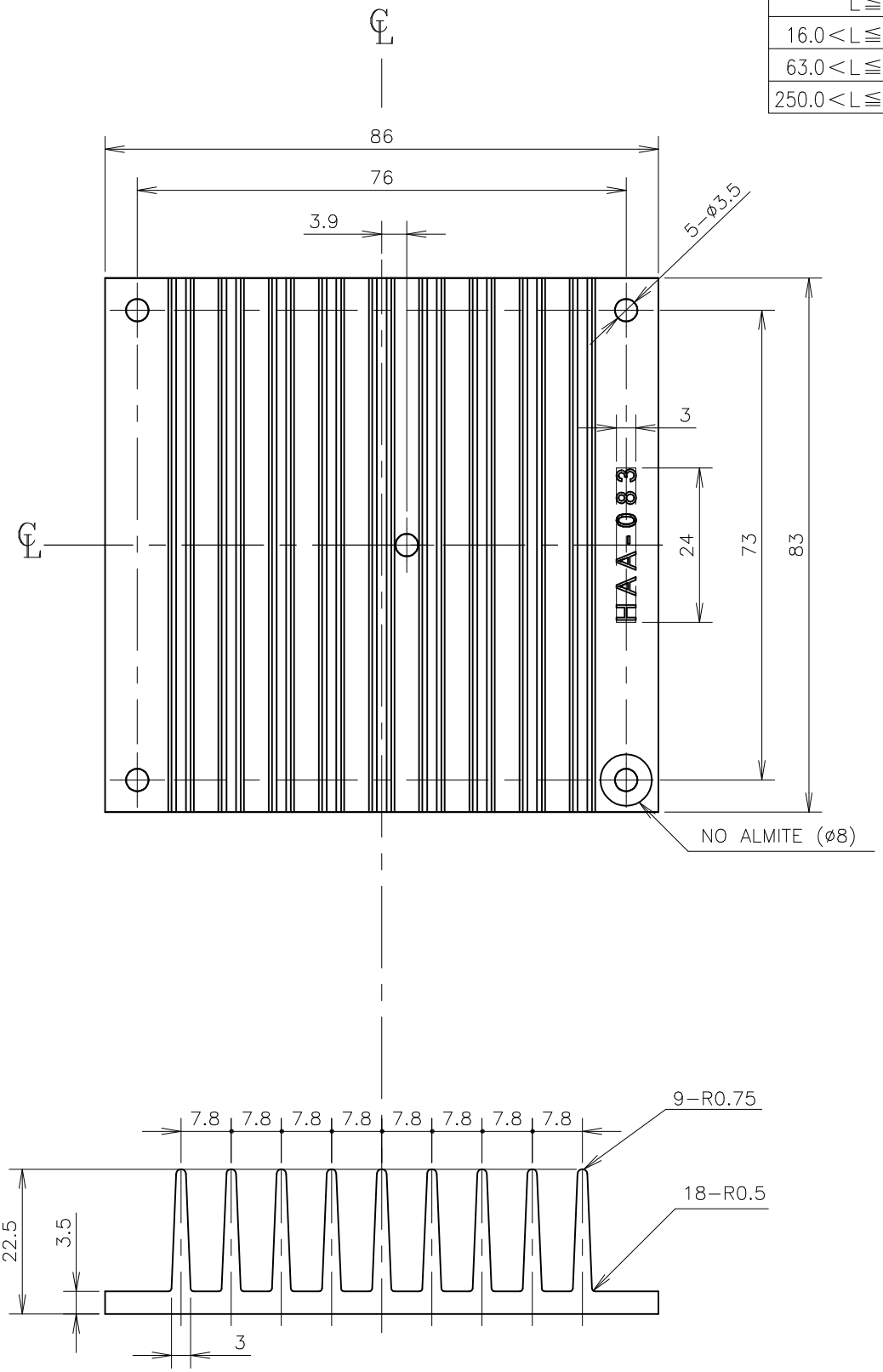

(unit : mm)

TITLE	HAA−083
TDK-Lambda	

8000−4−141A